Republic of the Philippines

CIVIL AVIATION AUTHORITY OF THE PHILIPPINES

PHILIPPINE BIDDING DOCUMENTS

Procurement of INFRASTRUCTURE PROJECTS

Government of the Republic of the Philippines

REPAIR/REPLACEMENT OF APRON LIGHTING (LED Type) at LAGUINDINGAN A/P (1st Rebid)

LAGUINDINGAN AIRPORT, Laguindingan, Misamis Oriental

Approved Budget for the Contract:

Three Million Six Hundred Fifty Thousand Six Hundred Forty Pesos Only

(Php 3,650,640.00)

BID NO.AX-2023-01

Sixth Edition

Preface

These Philippine Bidding Documents (PBDs) for the procurement of Infrastructure Projects (hereinafter referred to also as the "Works") through Competitive Bidding have been prepared by the Government of the Philippines for use by all branches, agencies, departments, bureaus, offices, or instrumentalities of the government, including government-owned and/or -controlled corporations, government financial institutions, state universities and colleges, local government units, and autonomous regional government. The procedures and practices presented in this document have been developed through broad experience, and are for mandatory use in projects that are financed in whole or in part by the Government of the Philippines or any foreign government/foreign or international financing institution in accordance with the provisions of the 2016 revised Implementing Rules and Regulations (IRR) of Republic Act (RA) No. 9184.

The PBDs are intended as a model for admeasurements (unit prices or unit rates in a bill of quantities) types of contract, which are the most common in Works contracting.

The Bidding Documents shall clearly and adequately define, among others: (i) the objectives, scope, and expected outputs and/or results of the proposed contract; (ii) the eligibility requirements of Bidders; (iii) the expected contract duration; and (iv) the obligations, duties, and/or functions of the winning Bidder.

Care should be taken to check the relevance of the provisions of the PBDs against the requirements of the specific Works to be procured. If duplication of a subject is inevitable in other sections of the document prepared by the Procuring Entity, care must be exercised to avoid contradictions between clauses dealing with the same matter.

Moreover, each section is prepared with notes intended only as information for the Procuring Entity or the person drafting the Bidding Documents. They shall not be included in the final documents. The following general directions should be observed when using the documents:

a. All the documents listed in the Table of Contents are normally required for the procurement of Infrastructure Projects. However, they should be adapted as necessary to the circumstances of the particular Project.

b. Specific details, such as the "*name of the Procuring Entity*" and "*address for bid submission*," should be furnished in the Instructions to Bidders, Bid Data Sheet, and Special Conditions of Contract. The final documents should contain neither blank spaces nor options.

c. This Preface and the footnotes or notes in italics included in the Invitation to Bid, BDS, General Conditions of Contract, Special Conditions of Contract, Specifications, Drawings, and Bill of Quantities are not part of the text of the final document, although they contain instructions that the Procuring Entity should strictly follow.

d. The cover should be modified as required to identify the Bidding Documents as to the names of the Project, Contract, and Procuring Entity, in addition to date of issue.

e. Modifications for specific Procurement Project details should be provided in the Special Conditions of Contract as amendments to the Conditions of Contract. For easy completion, whenever reference has to be made to specific clauses in the Bid Data Sheet or Special Conditions of Contract, these terms shall be printed in bold typeface on Sections I (Instructions to Bidders) and III (General Conditions of Contract), respectively.

f. For guidelines on the use of Bidding Forms and the procurement of Foreign-Assisted Projects, these will be covered by a separate issuance of the Government Procurement Policy Board.

TABLE OF CONTENTS

GLOSSARY OF **5**

TERMS, ABBREVIATIONS, AND ACRONYMS **5**

SECTION I. INVITATION TO BID **8**

Republic of the Philippines 9

CIVIL AVIATION AUTHORITY OF THE PHILIPPINES 9

..... 9

SECTION II. INSTRUCTIONS TO BIDDERS **11**

1. Scope of Bid 12
2. Funding Information 12
3. Bidding Requirements 12
4. Corrupt, Fraudulent, Collusive, Coercive, and Obstructive Practices 12
5. Eligible Bidders 13
6. Origin of Associated Goods 13
7. Subcontracts 13
8. Pre-Bid Conference 14
9. Clarification and Amendment of Bidding Documents 14
10. Documents Comprising the Bid: Eligibility and Technical Components 14
11. Documents Comprising the Bid: Financial Component 15
12. Alternative Bids 15
13. Bid Prices 15
14. Bid and Payment Currencies 15
15. Bid Security 16
16. Sealing and Marking of Bids 16
17. Deadline for Submission of Bids 16
18. Opening and Preliminary Examination of Bids 16
19. Detailed Evaluation and Comparison of Bids 16
20. Post Qualification 17
21. Signing of the Contract 17

SECTION III. BID DATA SHEET **18**

SECTION IV. GENERAL CONDITIONS OF CONTRACT **21**

1. Scope of Contract 22
2. Sectional Completion of Works 22

3. Possession of Site 22
4. The Contractor's Obligations 22
5. Performance Security 23
6. Site Investigation Reports 23
7. Warranty 23
8. Liability of the Contractor 23
9. Termination for Other Causes 23
10. Dayworks 24
11. Program of Work 24
12. Instructions, Inspections and Audits 24
13. Advance Payment 24
14. Progress Payments 24
15. Operating and Maintenance Manuals 25

SECTION V. SPECIAL CONDITIONS OF CONTRACT 26

SECTION VI. SPECIFICATIONS 28

SECTION VII. DRAWINGS 30

SECTION VIII. BILL OF QUANTITIES 33

SECTION IX. CHECKLIST OF TECHNICAL AND FINANCIAL DOCUMENTS 36

SECTION X. BIDDING FORMS 40

Glossary of Terms, Abbreviations, and Acronyms

ABC – Approved Budget for the Contract.

ARCC – Allowable Range of Contract Cost.

BAC – Bids and Awards Committee.

Bid – A signed offer or proposal to undertake a contract submitted by a bidder in response to and in consonance with the requirements of the bidding documents. Also referred to as *Proposal* and *Tender*. (2016 revised IRR, Section 5[c])

Bidder – Refers to a contractor, manufacturer, supplier, distributor and/or consultant who submits a bid in response to the requirements of the Bidding Documents. (2016 revised IRR, Section 5[d])

Bidding Documents – The documents issued by the Procuring Entity as the bases for bids, furnishing all information necessary for a prospective bidder to prepare a bid for the Goods, Infrastructure Projects, and/or Consulting Services required by the Procuring Entity. (2016 revised IRR, Section 5[e])

BIR – Bureau of Internal Revenue.

BSP – Bangko Sentral ng Pilipinas.

CDA – Cooperative Development Authority.

Consulting Services – Refer to services for Infrastructure Projects and other types of projects or activities of the GOP requiring adequate external technical and professional expertise that are beyond the capability and/or capacity of the GOP to undertake such as, but not limited to: (i) advisory and review services; (ii) pre-investment or feasibility studies; (iii) design; (iv) construction supervision; (v) management and related services; and (vi) other technical services or special studies. (2016 revised IRR, Section 5[i])

Contract – Refers to the agreement entered into between the Procuring Entity and the Supplier or Manufacturer or Distributor or Service Provider for procurement of Goods and Services; Contractor for Procurement of Infrastructure Projects; or Consultant or Consulting Firm for Procurement of Consulting Services; as the case may be, as recorded in the Contract Form signed by the parties, including all attachments and appendices thereto and all documents incorporated by reference therein.

Contractor – is a natural or juridical entity whose proposal was accepted by the Procuring Entity and to whom the Contract to execute the Work was awarded. Contractor as used in these Bidding Documents may likewise refer to a supplier, distributor, manufacturer, or consultant.

CPI – Consumer Price Index.

DOLE – Department of Labor and Employment.

DTI – Department of Trade and Industry.

Foreign-funded Procurement or Foreign-Assisted Project – Refers to procurement whose funding source is from a foreign government, foreign or international financing institution as specified in the Treaty or International or Executive Agreement. (2016 revised IRR, Section 5[b]).

GFI – Government Financial Institution.

GOCC – Government-owned and/or –controlled corporation.

Goods – Refer to all items, supplies, materials and general support services, except Consulting Services and Infrastructure Projects, which may be needed in the transaction of public businesses or in the pursuit of any government undertaking, project or activity, whether in the nature of equipment, furniture, stationery, materials for construction, or personal property of any kind, including non-personal or contractual services such as the repair and maintenance of equipment and furniture, as well as trucking, hauling, janitorial, security, and related or analogous services, as well as procurement of materials and supplies provided by the Procuring Entity for such services. The term "related" or "analogous services" shall include, but is not limited to, lease or purchase of office space, media advertisements, health maintenance services, and other services essential to the operation of the Procuring Entity. (2016 revised IRR, Section 5[r])

GOP – Government of the Philippines.

Infrastructure Projects – Include the construction, improvement, rehabilitation, demolition, repair, restoration or maintenance of roads and bridges, railways, airports, seaports, communication facilities, civil works components of information technology projects, irrigation, flood control and drainage, water supply, sanitation, sewerage and solid waste management systems, shore protection, energy/power and electrification facilities, national buildings, school buildings, hospital buildings, and other related construction projects of the government. Also referred to as *civil works or works*. (2016 revised IRR, Section 5[u])

LGUs – Local Government Units.

NFCC – Net Financial Contracting Capacity.

NGA – National Government Agency.

PCAB – Philippine Contractors Accreditation Board.

PhilGEPS - Philippine Government Electronic Procurement System.

Procurement Project – refers to a specific or identified procurement covering goods, infrastructure project or consulting services. A Procurement Project shall be described, detailed, and scheduled in the Project Procurement Management Plan prepared by the agency which shall be consolidated in the procuring entity's Annual Procurement Plan. (GPPB Circular No. 06-2019 dated 17 July 2019)

PSA – Philippine Statistics Authority.

SEC – Securities and Exchange Commission.

SLCC – Single Largest Completed Contract.

UN – United Nations.

Section I. Invitation to Bid

Notes on the Invitation to Bid

The Invitation to Bid (IB) provides information that enables potential Bidders to decide whether to participate in the procurement at hand. The IB shall be posted in accordance with Section 21.2 of the 2016 revised IRR of RA No. 9184.

Apart from the essential items listed in the Bidding Documents, the IB should also indicate the following:

a. The date of availability of the Bidding Documents, which shall be from the time the IB is first advertised/posted until the deadline for the submission and receipt of bids;

b. The place where the Bidding Documents may be acquired or the website where it may be downloaded;

c. The deadline for the submission and receipt of bids; and

d. Any important bid evaluation criteria.

The IB should be incorporated into the Bidding Documents. The information contained in the IB must conform to the Bidding Documents and in particular to the relevant information in the Bid Data Sheet.

Invitation to Bid for

REPAIR/REPLACEMENT OF APRON LIGHTING (LED Type) at LAGUINDINGAN A/P (1st Rebid)

1. The ***Civil Aviation Authority of the Philippines***, through the CAAP Corporate Budget 2023 intends to apply the sum of **THREE MILLION SIX HUNDRED FIFTY THOUSAND SIX HUNDRED FORTY PESOS ONLY (Php 3,650,640.00)** being the Approved Budget for the Contract (ABC) to payments under the contract for **REPAIR/REPLACEMENT OF APRON LIGHTING (LED Type) at LAGUINDINGAN A/P (1st Rebid) (Bid No. AX-2023-01)**. Bids received in excess of the ABC shall be automatically rejected at bid opening.

2. The **Civil Aviation Authority of the Philippines – LAGUINDINGAN AIRPORT, AREA CENTER X** now invites bids for the above Procurement Project. Completion of the Works is required ***Ninety [90] Calendar Days*** Bidders should have completed a contract similar to the Project. The description of an eligible bidder is contained in the Bidding Documents, particularly, in Section II (Instructions to Bidders).

3. Bidding will be conducted through open competitive e bidding procedures using non-discretionary "*pass/fail*" criterion as specified in the 2016 revised Implementing Rules and Regulations (IRR) of Republic Act (RA) No. 9184.

4. Interested bidders may obtain further information from **BAC Office, 2nd Floor, CFR Building, Civil Aviation Authority of the Philippines, Laguindingan Airport, Laguindingan Misamis Oriental** and inspect the Bidding Documents at the address given below from 8:00am-5:00pm Monday-Friday.

5. A complete set of Bidding Documents may be acquired by interested bidders **August 3, 2023** and until the deadline of submission of bid from given address and website/s below*: and upon payment of the applicable fee for the Bidding Documents, pursuant to the latest Guidelines issued by the GPPB, in the amount of* **Five Thousand Pesos (5,000.00) plus 12% of VAT per RA 10963 otherwise known as TAX Reform for Acceleration and Inclusion (TRAIN)**.The Procuring Entity shall allow the bidder to present its proof of payment for the fees in person.

6. The Civil Aviation Authority of the Philippines – Laguindingan Airport will hold a Pre-Bid Conference[1] on **August 11, 2023, 9:00 AM** at CAAP Laguindingan Airport Conference Room (PMO Building) and/or through video conferencing *via Google Meet (Please coordinate with BAC Secretariat prior to the schedule of Pre-Bid for the Google Meet link)* which shall be open to prospective bidders.

[1] May be deleted in case the ABC is less than One Million Pesos (PhP1,000,000) where the Procuring Entity may not hold a pre-bid conference.

7. Bids must be duly received by the BAC Secretariat through (i) manual submission at the office address as indicated below on or before **August 23, 2023, 9:00 AM**. Late bids shall not be accepted.

8. All bids must be accompanied by a bid security in any of the acceptable forms and in the amount stated in **ITB** Clause 15.1.

9. Bid opening shall be on **August 23, 2023, 9:30 AM** at the given address below. Bids will be opened in the presence of the bidders' representatives who choose to attend the activity.

10. The Civil Aviation Authority of the Philippines – Laguindingan Airport reserves the right to reject any and all bids, declare a failure of bidding, or not award the contract at any time prior to contract award in accordance with Sections 35.6 and 41 of the 2016 revised Implementing Rules and Regulations (IRR) of RA No. 9184, without thereby incurring any liability to the affected bidder or bidders.

11. For further information, please refer to:

    YOGI J. SAMBAAN
    Head, BAC Secretariat
    Civil Aviation Authority of the Philippines –Laguindingan Airport
    Laguindingan, Misamis Oriental
    caap10bacsec@gmail.com
    (088) 555-1881 local 1404, 09265681844
    Caap.gov.ph

12. Bidding Documents may also be down free of charge from the website of the Philippine Government Electronic Procurement System (PhilGEPS) and the website of the Procuring Entity, provided that bidders shall pay the applicable fee for the Bidding Documents not later than the submission of their bids.

_____
ATTY. FAITH THERESE GANDOLA-OBSIOMA
Chairperson, Bids and Award Committee

Section II. Instructions to Bidders

Notes on the Instructions to Bidders

This Section on the Instruction to Bidders (ITB) provides the information necessary for bidders to prepare responsive bids, in accordance with the requirements of the Procuring Entity. It also provides information on bid submission, eligibility check, opening and evaluation of bids, post-qualification, and on the award of contract.

1. Scope of Bid

The Procuring Entity, Civil Aviation Authority of the Philippines – Laguindingan Airport invites Bids for the **Repair/Replacement of Apron Lighting (LED Type) at Laguindingan A/P (1st Rebid)** with Project Identification Number **Bid. No. AX-2023-01.**

[Note: The Project Identification Number is assigned by the Procuring Entity based on its own coding scheme and is not the same as the PhilGEPS reference number, which is generated after the posting of the bid opportunity on the PhilGEPS website.]

The Procurement Project (referred to herein as "Project") is for the installation of Apron Lightings including civil works, as described in Section VI (Specifications).

2. Funding Information

2.1. The GOP through the source of funding as indicated below for CAAP Corporate Budget 2022 in the amount of **Three Million Six Hundred Fifty Thousand Six Hundred Forty Pesos Only (Php 3,650,640.00).**

2.2. The source of funding is:

a. GOCC and GFIs, the proposed Corporate Operating Budget

3. Bidding Requirements

The Bidding for the Project shall be governed by all the provisions of RA No. 9184 and its 2016 revised IRR, including its Generic Procurement Manual and associated policies, rules and regulations as the primary source thereof, while the herein clauses shall serve as the secondary source thereof.

Any amendments made to the IRR and other GPPB issuances shall be applicable only to the ongoing posting, advertisement, or invitation to bid by the BAC through the issuance of a supplemental or bid bulletin.

The Bidder, by the act of submitting its Bid, shall be deemed to have inspected the site, determined the general characteristics of the contracted Works and the conditions for this Project, such as the location and the nature of the work; (b) climatic conditions; (c) transportation facilities; (c) nature and condition of the terrain, geological conditions at the site communication facilities, requirements, location and availability of construction aggregates and other materials, labor, water, electric power and access roads; and (d) other factors that may affect the cost, duration and execution or implementation of the contract, project, or work and examine all instructions, forms, terms, and project requirements in the Bidding Documents.

4. Corrupt, Fraudulent, Collusive, Coercive, and Obstructive Practices

The Procuring Entity, as well as the Bidders and Contractors, shall observe the highest standard of ethics during the procurement and execution of the contract. They or through an agent shall not engage in corrupt, fraudulent, collusive, coercive, and obstructive practices defined under Annex "I" of the 2016 revised IRR of RA No. 9184 or other integrity violations in competing for the Project.

5. Eligible Bidders

5.1. Only Bids of Bidders found to be legally, technically, and financially capable will be evaluated.

5.2. The Bidder must have an experience of having completed a Single Largest Completed Contract (SLCC) that is similar to this Project, equivalent to at least fifty percent (50%) of the ABC adjusted, if necessary, by the Bidder to current prices using the PSA's CPI, except under conditions provided for in Section 23.4.2.4 of the 2016 revised IRR of RA No. 9184.

A contract is considered to be "similar" to the contract to be bid if it has the major categories of work stated in the **BDS**.

5.3. For Foreign-funded Procurement, the Procuring Entity and the foreign government/foreign or international financing institution may agree on another track record requirement, as specified in the Bidding Document prepared for this purpose.

5.4. The Bidders shall comply with the eligibility criteria under Section 23.4.2 of the 2016 IRR of RA No. 9184.

6. Origin of Associated Goods

There is no restriction on the origin of Goods other than those prohibited by a decision of the UN Security Council taken under Chapter VII of the Charter of the UN.

7. Subcontracts

7.1. The Bidder may subcontract portions of the Project to the extent allowed by the Procuring Entity as stated herein, but in no case more than fifty percent (50%) of the Project.

The Procuring Entity has prescribed that:

a. Subcontracting is not allowed.

7.1. *[If Procuring Entity has determined that subcontracting is allowed during the bidding, state:]* The Bidder must submit together with its Bid the documentary requirements of the subcontractor(s) complying with the eligibility criteria stated in **ITB** Clause 5 in accordance with Section 23.4 of the 2016 revised IRR of RA No. 9184 pursuant to Section 23.1 thereof.

7.2. *[If subcontracting is allowed during the contract implementation stage, state:]* The Supplier may identify its subcontractor during the contract implementation stage. Subcontractors identified during the bidding may be changed during the implementation of this Contract. Subcontractors must submit the documentary requirements under Section 23.1 of the 2016 revised IRR of RA No. 9184 and comply with the eligibility criteria specified in **ITB** Clause 5 to the implementing or end-user unit.

7.3. Subcontracting of any portion of the Project does not relieve the Contractor of any liability or obligation under the Contract. The Supplier will be responsible for the acts, defaults, and negligence of any subcontractor, its agents, servants, or workmen as fully as if these were the Contractor's own acts, defaults, or negligence, or those of its agents, servants, or workmen.

8. Pre-Bid Conference

The Procuring Entity will hold a pre-bid conference for this Project on the specified date and time and either at its physical address and/or through google meet as indicated in paragraph 6 of the **IB.**

9. Clarification and Amendment of Bidding Documents

Prospective bidders may request for clarification on and/or interpretation of any part of the Bidding Documents. Such requests must be in writing and received by the Procuring Entity, either at its given address or through electronic mail indicated in the **IB**, at least ten (10) calendar days before the deadline set for the submission and receipt of Bids.

10. Documents Comprising the Bid: Eligibility and Technical Components

10.1. The first envelope shall contain the eligibility and technical documents of the Bid as specified in **Section IX. Checklist of Technical and Financial Documents**.

10.2. If the eligibility requirements or statements, the bids, and all other documents for submission to the BAC are in foreign language other than English, it must be accompanied by a translation in English, which shall be authenticated by the appropriate Philippine foreign service establishment, post, or the equivalent office having jurisdiction over the foreign bidder's affairs in the Philippines. For Contracting Parties to the Apostille Convention, only the translated documents shall be authenticated through an apostille pursuant to GPPB Resolution No. 13-2019 dated 23 May 2019. The English translation shall govern, for purposes of interpretation of the bid.

10.3. A valid PCAB License is required, and in case of joint ventures, a valid special PCAB License, and registration for the type and cost of the contract for this Project. Any additional type of Contractor license or permit shall be indicated in the **BDS**.

10.4. A List of Contractor's key personnel (e.g., Project Manager, Project Engineers, Materials Engineers, and Foremen) assigned to the contract to be bid, with their complete qualification and experience data shall be provided. These key personnel must meet the required minimum years of experience set in the **BDS**.

10.5. A List of Contractor's major equipment units, which are owned, leased, and/or under purchase agreements, supported by proof of ownership, certification of availability of equipment from the equipment lessor/vendor for the duration of the project, as the case may be, must meet the minimum requirements for the contract set in the **BDS**.

11. Documents Comprising the Bid: Financial Component

11.1. The second bid envelope shall contain the financial documents for the Bid as specified in **Section IX. Checklist of Technical and Financial Documents**.

11.2. Any bid exceeding the ABC indicated in paragraph 1 of the **IB** shall not be accepted.

11.3. For Foreign-funded procurement, a ceiling may be applied to bid prices provided the conditions are met under Section 31.2 of the 2016 revised IRR of RA No. 9184.

12. Alternative Bids

Bidders shall submit offers that comply with the requirements of the Bidding Documents, including the basic technical design as indicated in the drawings and specifications. Unless there is a value engineering clause in the **BDS**, alternative Bids shall not be accepted.

13. Bid Prices

All bid prices for the given scope of work in the Project as awarded shall be considered as fixed prices, and therefore not subject to price escalation during contract implementation, except under extraordinary circumstances as determined by the NEDA and approved by the GPPB pursuant to the revised Guidelines for Contract Price Escalation guidelines.

14. Bid and Payment Currencies

14.1. Bid prices may be quoted in the local currency or tradeable currency accepted by the BSP at the discretion of the Bidder. However, for purposes of bid evaluation, Bids denominated in foreign currencies shall be converted to Philippine currency based on the exchange rate as published in the BSP reference rate bulletin on the day of the bid opening.

14.2. *Payment of the contract price shall be made in*

a. Philippine Pesos.

15. Bid Security

15.1. The Bidder shall submit a Bid Securing Declaration or any form of Bid Security in the amount indicated in the **BDS**, which shall be not less than the percentage of the ABC in accordance with the schedule in the **BDS**.

15.2. The Bid and bid security shall be valid until *[indicate date]*. Any bid not accompanied by an acceptable bid security shall be rejected by the Procuring Entity as non-responsive.

16. Sealing and Marking of Bids

Each Bidder shall submit one copy of the first and second components of its Bid.

The Procuring Entity may request additional hard copies and/or electronic copies of the Bid. However, failure of the Bidders to comply with the said request shall not be a ground for disqualification.

If the Procuring Entity allows the submission of bids through online submission to the given website or any other electronic means, the Bidder shall submit an electronic copy of its Bid, which must be digitally signed. An electronic copy that cannot be opened or is corrupted shall be considered non-responsive and, thus, automatically disqualified.

17. Deadline for Submission of Bids

The Bidders shall submit on the specified date and time and either at its physical address or through online submission as indicated in paragraph 7 of the **IB.**

18. Opening and Preliminary Examination of Bids

18.1. The BAC shall open the Bids in public at the time, on the date, and at the place specified in paragraph 9 of the **IB**. The Bidders' representatives who are present shall sign a register evidencing their attendance. In case videoconferencing, webcasting or other similar technologies will be used, attendance of participants shall likewise be recorded by the BAC Secretariat.

In case the Bids cannot be opened as scheduled due to justifiable reasons, the rescheduling requirements under Section 29 of the 2016 revised IRR of RA No. 9184 shall prevail.

18.2. The preliminary examination of Bids shall be governed by Section 30 of the 2016 revised IRR of RA No. 9184.

19. Detailed Evaluation and Comparison of Bids

19.1. The Procuring Entity's BAC shall immediately conduct a detailed evaluation of all Bids rated "*passed*" using non-discretionary pass/fail criteria. The BAC shall consider the conditions in the evaluation of Bids under Section 32.2 of 2016 revised IRR of RA No. 9184.

19.2. If the Project allows partial bids, all Bids and combinations of Bids as indicated in the **BDS** shall be received by the same deadline and opened and evaluated simultaneously so as to determine the Bid or combination of Bids offering the lowest calculated cost to the Procuring Entity. Bid Security as required by **ITB** Clause 16 shall be submitted for each contract (lot) separately.

19.3. In all cases, the NFCC computation pursuant to Section 23.4.2.6 of the 2016 revised IRR of RA No. 9184 must be sufficient for the total of the ABCs for all the lots participated in by the prospective Bidder.

20. Post Qualification

Within a non-extendible period of five (5) calendar days from receipt by the Bidder of the notice from the BAC that it submitted the Lowest Calculated Bid, the Bidder shall submit its latest income and business tax returns filed and paid through the BIR Electronic Filing and Payment System (eFPS), and other appropriate licenses and permits required by law and stated in the **BDS**.

21. Signing of the Contract

The documents required in Section 37.2 of the 2016 revised IRR of RA No. 9184 shall form part of the Contract. Additional Contract documents are indicated in the **BDS**.

Section III. Bid Data Sheet

Notes on the Bid Data Sheet (BDS)

The Bid Data Sheet (BDS) consists of provisions that supplement, amend, or specify in detail, information, or requirements included in the ITB found in Section II, which are specific to each procurement.

This Section is intended to assist the Procuring Entity in providing the specific information in relation to corresponding clauses in the ITB and has to be prepared for each specific procurement.

The Procuring Entity should specify in the BDS information and requirements specific to the circumstances of the Procuring Entity, the processing of the procurement, and the bid evaluation criteria that will apply to the Bids. In preparing the BDS, the following aspects should be checked:

a. Information that specifies and complements provisions of the ITB must be incorporated.

b. Amendments and/or supplements, if any, to provisions of the ITB as necessitated by the circumstances of the specific procurement, must also be incorporated.

Bid Data Sheet

ITB Clause	
3.0	Certificate of Site Inspection duly signed by **ENGR.GERALDMILM. PANGAN, End User/FIC, ANS** or her duly authorized representative, is required to be submitted. A Copy of Company ID of the person who conducted the site inspection shall be submitted as attachment to the Certificate of Site Inspection.
5.2	For this purpose, contracts similar to the Project refer to contracts which have the same major categories of work, which shall be: *"Installation of floodlights/LED Lights".*
7.1	*Subcontracting is NOT allowed.*
10.3	Valid Philippine Contractors Accreditation Board (PCAB) license is required. Classification: General Engineering Size Range: Small B
10.4	The key personnel must meet the required minimum years of experience set below
	Key Personnel / **General Experience** / **Relevant Experience** Electrical Engineer / Electrical/Civil Works / 3 years in floodlight installations and associated civil works Heavy Equipment Operator
10.5	The minimum major equipment requirements are the following: **Equipment** / **Capacity** / **Number of Units** 1. Hydraulic beam lifter truck 2. Boom truck crane
11.1	**The discounts stated in the Financial Bid Form shall be computer written with the same font style and size as of the whole text of the said form.** **Discounts that are either handwritten, type written or computer written in other font style and size shall not be considered**. The second bid envelope shall contain the financial documents for the Bid as specified in Section X. Checklist of Technical and Financial Documents. The materials and quantity listed in the Bill of Quantities/Detailed Estimate are the minimum requirements for the project. Bidders may OPT to add materials and quantity that they think may be essential to the project. Failure to include these minimum materials **shall be a ground for disqualification**. The Authorized Representative shall affix his/her Signature of each and every page on the Signature Box of the Bill of Quantities, Detailed Estimates, Summary Sheet of Unit Prices of Materials, Labor and Equipment. **Bids not complying with the above instruction shall be disqualified**

12	No further Instructions.
15.1	The bid security shall be in the form of a Bid Securing Declaration or any of the following forms and amounts: a. The amount of not less than **Seventy-Three Thousand Twelve & 80/100 (Php 73,012.80)** two percent (2%) of the ABC, if bid security is in cash, cashier's/manager's check, bank draft/guarantee or irrevocable letter of credit; b. The amount of not less than **One Hundred Eighty-Two Thousand Five Hundred Thirty-Two Pesos (Php 182,532.00)** five percent (5%) of the ABC if bid security is in Surety Bond.
16	**1.** Each and every page thereof shall be initialed/signed by the duly authorized representative/s of the bidder in **BLUE** or **BLACK** ink. Pagination should be sequential based on the entire span of the whole documents inside the envelope. Must be sequentially paginated in accurate order in the form of: e.g "1 of 100" or "1,2,3,4,5….100" **Bids not complying with the above instructions shall be automatically disqualified**. Submitted Eligibility, Technical and Financial documents shall be properly marked with index tabs (ear tab). ***2.*** Each Bidder shall submit one (1) original and two (2) copies of the first and second components of its bid.
19.2	Partial bids is not allowed.
20	The following certification are required during post-qualification. 1. ISO 9001:2015 Certification of the factory where the product is assembled or made. 2. IP66/IK08 (with IP66and IK08 or higher Test Report of product offered) 3 3G Vibration Test Report 4. CE Mark Certificate 5. RoHS Certificate 6. Static Pressure Test Report **Bids not complying for the above requirements shall be disqualified**
21	The following relevant project documents are required to be submitted by the successful bidder who submitted the LCRB as part of the Contract Agreement during its signing: a.) Construction schedule b.) Bar Chart & S-curve c.) PERT/CPM Network Diagram d.) Manpower schedule e) Construction methods f.) Construction safety & health programs approved by DOLE g.) Performance Bond

Section IV. General Conditions of Contract

Notes on the General Conditions of Contract

The General Conditions of Contract (GCC) in this Section, read in conjunction with the Special Conditions of Contract in Section V and other documents listed therein, should be a complete document expressing all the rights and obligations of the parties.

Matters governing performance of the Contractor, payments under the contract, or matters affecting the risks, rights, and obligations of the parties under the contract are included in the GCC and Special Conditions of Contract.

Any complementary information, which may be needed, shall be introduced only through the Special Conditions of Contract.

1. Scope of Contract

This Contract shall include all such items, although not specifically mentioned, that can be reasonably inferred as being required for its completion as if such items were expressly mentioned herein. All the provisions of RA No. 9184 and its 2016 revised IRR, including the Generic Procurement Manual, and associated issuances, constitute the primary source for the terms and conditions of the Contract, and thus, applicable in contract implementation. Herein clauses shall serve as the secondary source for the terms and conditions of the Contract.

This is without prejudice to Sections 74.1 and 74.2 of the 2016 revised IRR of RA No. 9184 allowing the GPPB to amend the IRR, which shall be applied to all procurement activities, the advertisement, posting, or invitation of which were issued after the effectivity of the said amendment.

2. Sectional Completion of Works

If sectional completion is specified in the **Special Conditions of Contract (SCC)**, references in the Conditions of Contract to the Works, the Completion Date, and the Intended Completion Date shall apply to any Section of the Works (other than references to the Completion Date and Intended Completion Date for the whole of the Works).

3. Possession of Site

4.1. The Procuring Entity shall give possession of all or parts of the Site to the Contractor based on the schedule of delivery indicated in the **SCC,** which corresponds to the execution of the Works. If the Contractor suffers delay or incurs cost from failure on the part of the Procuring Entity to give possession in accordance with the terms of this clause, the Procuring Entity's Representative shall give the Contractor a Contract Time Extension and certify such sum as fair to cover the cost incurred, which sum shall be paid by Procuring Entity.

4.2. If possession of a portion is not given by the above date, the Procuring Entity will be deemed to have delayed the start of the relevant activities. The resulting adjustments in contract time to address such delay may be addressed through contract extension provided under Annex "E" of the 2016 revised IRR of RA No. 9184.

4. The Contractor's Obligations

The Contractor shall employ the key personnel named in the Schedule of Key Personnel indicating their designation, in accordance with **ITB** Clause 10.3 and specified in the **BDS**, to carry out the supervision of the Works.

The Procuring Entity will approve any proposed replacement of key personnel only if their relevant qualifications and abilities are equal to or better than those of the personnel listed in the Schedule.

5. Performance Security

5.1. Within ten (10) calendar days from receipt of the Notice of Award from the Procuring Entity but in no case later than the signing of the contract by both parties, the successful Bidder shall furnish the performance security in any of the forms prescribed in Section 39 of the 2016 revised IRR.

5.2. The Contractor, by entering into the Contract with the Procuring Entity, acknowledges the right of the Procuring Entity to institute action pursuant to RA No. 3688 against any subcontractor be they an individual, firm, partnership, corporation, or association supplying the Contractor with labor, materials and/or equipment for the performance of this Contract.

6. Site Investigation Reports

The Contractor, in preparing the Bid, shall rely on any Site Investigation Reports referred to in the **SCC** supplemented by any information obtained by the Contractor.

7. Warranty

7.1. In case the Contractor fails to undertake the repair works under Section 62.2.2 of the 2016 revised IRR, the Procuring Entity shall forfeit its performance security, subject its property(ies) to attachment or garnishment proceedings, and perpetually disqualify it from participating in any public bidding. All payables of the GOP in his favor shall be offset to recover the costs.

7.2. The warranty against Structural Defects/Failures, except that occasioned-on force majeure, shall cover the period from the date of issuance of the Certificate of Final Acceptance by the Procuring Entity. Specific duration of the warranty is found in the **SCC**.

8. Liability of the Contractor

Subject to additional provisions, if any, set forth in the **SCC**, the Contractor's liability under this Contract shall be as provided by the laws of the Republic of the Philippines.

If the Contractor is a joint venture, all partners to the joint venture shall be jointly and severally liable to the Procuring Entity.

9. Termination for Other Causes

Contract termination shall be initiated in case it is determined *prima facie* by the Procuring Entity that the Contractor has engaged, before, or during the implementation of the contract, in unlawful deeds and behaviors relative to contract acquisition and implementation, such as, but not limited to corrupt, fraudulent, collusive, coercive, and obstructive practices as stated in **ITB** Clause 4.

10. Dayworks

Subject to the guidelines on Variation Order in Annex "E" of the 2016 revised IRR of RA No. 9184, and if applicable as indicated in the **SCC**, the Dayworks rates in the Contractor's Bid shall be used for small additional amounts of work only when the Procuring Entity's Representative has given written instructions in advance for additional work to be paid for in that way.

11. Program of Work

11.1. The Contractor shall submit to the Procuring Entity's Representative for approval the said Program of Work showing the general methods, arrangements, order, and timing for all the activities in the Works. The submissions of the Program of Work are indicated in the **SCC.**

11.2. The Contractor shall submit to the Procuring Entity's Representative for approval an updated Program of Work at intervals no longer than the period stated in the **SCC.** If the Contractor does not submit an updated Program of Work within this period, the Procuring Entity's Representative may withhold the amount stated in the **SCC** from the next payment certificate and continue to withhold this amount until the next payment after the date on which the overdue Program of Work has been submitted.

12. Instructions, Inspections and Audits

The Contractor shall permit the GOP or the Procuring Entity to inspect the Contractor's accounts and records relating to the performance of the Contractor and to have them audited by auditors of the GOP or the Procuring Entity, as may be required.

13. Advance Payment

The Procuring Entity shall, upon a written request of the Contractor which shall be submitted as a Contract document, make an advance payment to the Contractor in an amount not exceeding fifteen percent (15%) of the total contract price, to be made in lump sum, or at the most two installments according to a schedule specified in the **SCC**, subject to the requirements in Annex "E" of the 2016 revised IRR of RA No. 9184.

14. Progress Payments

The Contractor may submit a request for payment for Work accomplished. Such requests for payment shall be verified and certified by the Procuring Entity's Representative/Project Engineer. Except as otherwise stipulated in the **SCC**, materials and equipment delivered on the site but not completely put in place shall not be included for payment.

15. Operating and Maintenance Manuals

15.1. If required, the Contractor will provide "as built" Drawings and/or operating and maintenance manuals as specified in the **SCC.**

15.2. If the Contractor does not provide the Drawings and/or manuals by the dates stated above, or they do not receive the Procuring Entity's Representative's approval, the Procuring Entity's Representative may withhold the amount stated in the **SCC** from payments due to the Contractor.

Section V. Special Conditions of Contract

Notes on the Special Conditions of Contract

Similar to the BDS, the clauses in this Section are intended to assist the Procuring Entity in providing contract-specific information in relation to corresponding clauses in the GCC found in Section IV.

The Special Conditions of Contract (SCC) complement the GCC, specifying contractual requirements linked to the special circumstances of the Procuring Entity, the Procuring Entity's country, the sector, and the Works procured. In preparing this Section, the following aspects should be checked:

a. Information that complements provisions of the GCC must be incorporated.

b. Amendments and/or supplements to provisions of the GCC as necessitated by the circumstances of the specific purchase, must also be incorporated.

However, no special condition which defeats or negates the general intent and purpose of the provisions of the GCC should be incorporated herein.

Special Conditions of Contract

GCC Clause	
2	*Not applicable.*
4.1	The **Civil Aviation Authority of the Philippines – Laguindingan Airport** shall give possession of all the parts of the site to the Contractor upon receipt of the Notice to Proceed.
6	Not applicable.
7.2	Two (2) years.
10	No dayworks are applicable to the contract.
11.1	Not applicable.
11.2	Not applicable.
13	CAAP Memorandum Circular No. 033-2022 "As per Revised Implementing Rules and regulation of republic Act 9184 and the published and issued Philippine Bidding Documents of infrastructure projects, the Civil Aviation Authority of the Philippines (CAAP) shall, upon a written request of the Contractor which shall be submitted as a contract documents, make an advance payment to the Contractor in an amount not exceeding **fifteen percent (15%)** of the total contract price, to be made in lump sum or at the most two installments".
14	The Contractor may request for a payment starting at 25% work accomplishment as verified and certified by the Project Engineer. Materials and equipment delivered on the site but not completely put in place may be included for payment as determined by the Project Engineer.
15.1	Not applicable.
15.2	Not applicable.

Section VI. Specifications

Notes on Specifications

A set of precise and clear specifications is a prerequisite for Bidders to respond realistically and competitively to the requirements of the Procuring Entity without qualifying or conditioning their Bids. In the context of international competitive bidding, the specifications must be drafted to permit the widest possible competition and, at the same time, present a clear statement of the required standards of workmanship, materials, and performance of the goods and services to be procured. Only if this is done will the objectives of economy, efficiency, and fairness in procurement be realized, responsiveness of Bids be ensured, and the subsequent task of bid evaluation facilitated. The specifications should require that all goods and materials to be incorporated in the Works be new, unused, of the most recent or current models, and incorporate all recent improvements in design and materials unless provided otherwise in the Contract.

Samples of specifications from previous similar projects are useful in this respect. The use of metric units is mandatory. Most specifications are normally written specially by the Procuring Entity or its representative to suit the Works at hand. There is no standard set of Specifications for universal application in all sectors in all regions, but there are established principles and practices, which are reflected in these PBDs.

There are considerable advantages in standardizing General Specifications for repetitive Works in recognized public sectors, such as highways, ports, railways, urban housing, irrigation, and water supply, in the same country or region where similar conditions prevail. The General Specifications should cover all classes of workmanship, materials, and equipment commonly involved in construction, although not necessarily to be used in a particular Works Contract. Deletions or addenda should then adapt the General Specifications to the particular Works.

Care must be taken in drafting specifications to ensure that they are not restrictive. In the specification of standards for goods, materials, and workmanship, recognized international standards should be used as much as possible. Where other particular standards are used, whether national standards or other standards, the specifications should state that goods, materials, and workmanship that meet other authoritative standards, and which ensure substantially equal or higher quality than the standards mentioned, will also be acceptable. The following clause may be inserted in the SCC.

Sample Clause: Equivalency of Standards and Codes

Wherever reference is made in the Contract to specific standards and codes to be met by the goods and materials to be furnished, and work performed or tested, the provisions of the latest current edition or revision of the relevant standards and codes in effect shall apply, unless otherwise expressly stated in the Contract. Where such standards and codes are national, or relate to a particular country or region, other authoritative standards that

ensure a substantially equal or higher quality than the standards and codes specified will be accepted subject to the Procuring Entity's Representative's prior review and written consent. Differences between the standards specified and the proposed alternative standards shall be fully described in writing by the Contractor and submitted to the Procuring Entity's Representative at least twenty-eight (28) days prior to the date when the Contractor desires the Procuring Entity's Representative's consent. In the event the Procuring Entity's Representative determines that such proposed deviations do not ensure substantially equal or higher quality, the Contractor shall comply with the standards specified in the documents.

These notes are intended only as information for the Procuring Entity or the person drafting the Bidding Documents. They should not be included in the final Bidding Documents.

1.0 GENERAL

- The works to be accomplished by the successful bidders shall consist of project management/supervision of labor, materials, supplies, tools and equipment to complete the scope of work for the **REPAIR/REPLACEMENT OF APRON LIGHTING (LED TYPE) AT LAGUINDINGAN A/P.**

- All scope of works must be in accordance with the plans and specifications. The quality and type of materials must conform to the specifications and must be approved first by the Engineer-In-Charge assigned by **CAAP-LGDA**.

- The contractor shall be responsible for the safety of all activities on the site. Thus, the contractor shall provide safety perimeter fence or security fences, personal protective equipment (PPE) for staff and workers on site while installation is ongoing. Safety reports should be prepared regularly.

- The contractor shall commence execution of the Works on the Start Date and shall carry out the works in accordance with the Program of Work and shall complete the project by the intended completion date. Work permit should be requested by the contractor.

- The contractor shall provide weekly target schedule and weekly accomplishment report to the Engineer-In-Charge assigned by **CAAP-LGDA**.

- The contractor shall be responsible for the cleanliness before and after the daily work for the safety of all workers and employees.

- The contractor shall be responsible for all laboratory, material testing, building and safety permits and survey instruments necessary in the project implementation. The contractor shall provide structural analysis on the project given. These expenses shall be incorporated in the Contractor's overhead cost and shall not be considered as pay item.

2.0 LOCATION OF THE PROJECT

- The Contract to bid is located at the Laguindingan Airport, Laguindingan, Misamis Oriental.

3.0 SCOPE OF WORKS

- The details of work are best enumerated below, but be noted that the Contract includes all works and services although not specifically mentioned herein, but are needed to fully complete the Project.

- The project covers the supply of labor, materials, mobilization/demobilization, tools/equipment, and construction related permits necessary for the **REPAIR/REPLACEMENT OF APRON LIGHTING (LED TYPE) AT LAGUINDINGAN A/P** with the following scope of works which shall be done in accordance with the approved plans, specifications and provision of contract wit: (Work shall include but is not limited to the following)

I. ELECTRICAL WORKS

The works includes all materials, labor and equipment/tools, mobilization/demobilization, material testing to complete the repair/replacement of the 1000 Watts HID Lamps to 500 - 600 Watts (LED Type), and the repair/replacement of electrical wires as indicated on the plan. Any damage occur during the repair/replacement are at cost by the contractor. Electrical works of the shall be tested and commissioned.

- The contractor shall submit first to the Project-in-Charge/End-user the LED Apron lighting for proper checking of the unit specification. Unit must conform to the required specification before the installation.
- The contractor shall verify the input voltage of the system and the operating voltage of the units to be installed.
- Any *connection/wire* & *accessories* needed to fully implement the project are at cost by the Contractor.

➢ **Illuminance Reading**

- The work includes the reading of horizontal and vertical illuminance using luxmeter at the aircraft parking position and must have a value of more than or equal to 20lux at a height of 2m.

II. CIVIL WORKS

The work includes all materials, labor, equipment/tools, mobilization/demobilization, to complete the construction of the enclosed wooden box for the damaged 1000Watts HID Lamps and the repair of the stainless-steel wire rope.

- The contractor shall use equipment (hydraulic beam lifter truck, Boom truck crane) for the repair of the stainless wire rope.
- The repair includes the dismantling and installation of the lighting fixture structure and other accessories (bolts and nuts).
- The Contractor shall separate the damaged lighting fixture and its components to be placed on the enclosed wooden box.
- Any damages that occur during the repair are at cost by the contractor.
- Repair/Civil works shall be tested and commissioned.

4.0 WARRANTY

- The contractor shall provide written and signed document stating the warranty (which includes terms and conditions) of all the work conducted both approved by both parties. The CAAP-LGA will impose warranty in any type/form stated in the IRR of RA 9184 upon completion of the project.

Prepared by:

Rocky S. Bahala Jr.
Electrical Engineer., ADMD

Section VII. Drawings

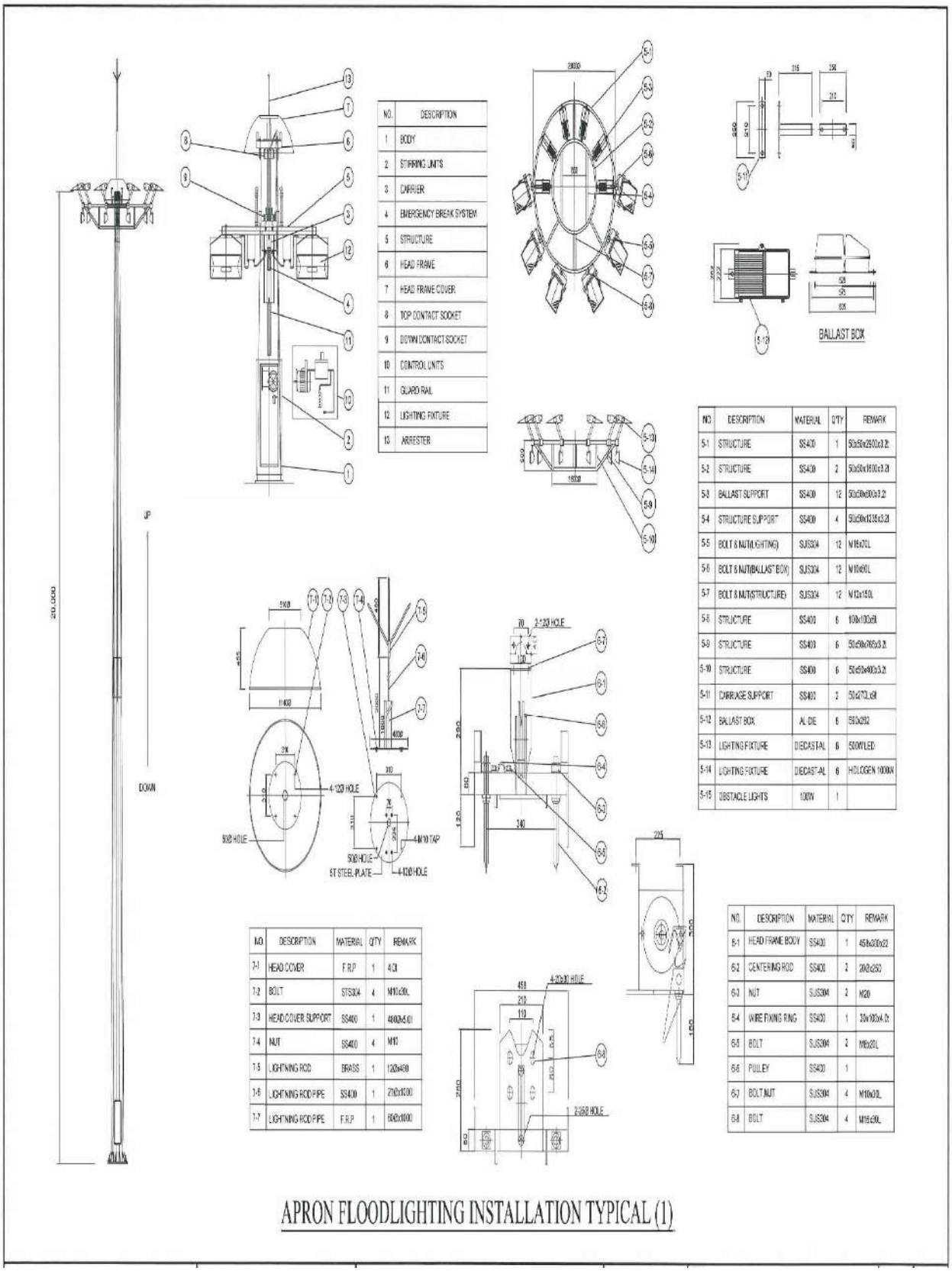

NO.	DESCRIPTION
1	BODY
2	STIRRING UNITS
3	CARRIER
4	EMERGENCY BREAK SYSTEM
5	STRUCTURE
6	HEAD FRAME
7	HEAD FRAME COVER
8	TOP CONTACT SOCKET
9	DOWN CONTACT SOCKET
10	CONTROL UNITS
11	GUARD RAIL
12	LIGHTING FIXTURE
13	ARRESTER

NO.	DESCRIPTION	MATERIAL	Q'TY	REMARK
5-1	STRUCTURE	SS400	1	50x50x2800x3.2t
5-2	STRUCTURE	SS400	2	50x50x1900x3.2t
5-3	BALLAST SUPPORT	SS400	12	50x50x600x3.2t
5-4	STRUCTURE SUPPORT	SS400	4	50x50x1335x3.2t
5-5	BOLT & NUT(LIGHTING)	SUS304	12	M16x70L
5-6	BOLT & NUT(BALLAST BOX)	SUS304	12	M10x60L
5-7	BOLT & NUT(STRUCTURE)	SUS304	12	M12x150L
5-8	STRUCTURE	SS400	6	100x100x6t
5-9	STRUCTURE	SS400	6	50x50x765x3.2t
5-10	STRUCTURE	SS400	6	50x50x400x3.2t
5-11	CARRIAGE SUPPORT	SS400	2	50x270L.6t
5-12	BALLAST BOX	AL-DIE	6	510x282
5-13	LIGHTING FIXTURE	DIECAST-AL	6	500W LED
5-14	LIGHTING FIXTURE	DIECAST-AL	6	HOLOGEN 1000W
5-15	OBSTACLE LIGHTS	100W	1	

NO.	DESCRIPTION	MATERIAL	Q'TY	REMARK
7-1	HEAD COVER	F.R.P	1	4.0t
7-2	BOLT	STS304	4	M10x30L
7-3	HEAD COVER SUPPORT	SS400	1	4800x5.0t
7-4	NUT	SS400	4	M10
7-5	LIGHTNING ROD	BRASS	1	120x480
7-6	LIGHTNING ROD PIPE	SS400	1	219x10.0t
7-7	LIGHTNING ROD PIPE	F.R.P	1	60x10.0t

NO.	DESCRIPTION	MATERIAL	Q'TY	REMARK
6-1	HEAD FRAME BODY	SS400	1	45x300x22
6-2	CENTERING ROD	SS400	2	20Øx250
6-3	NUT	SUS304	2	M20
6-4	WIRE FIXING RING	SS400	1	30x100x4.0t
6-5	BOLT	SUS304	2	M8x20L
6-6	PULLEY	SS400	1	
6-7	BOLT NUT	SUS304	4	M10x30L
6-8	BOLT	SUS304	4	M16x60L

Section VIII. Bill of Quantities

Bill of Quantities (Annex“L”), Detailed Estimates (Annex“M”), Summary Sheet indicating Unit Prices of Materials (Annex “Ma”), Labor Rates (Annex“Mb”), and Equipment (Annex “Mc”) shall be properly and completely fill in.

A Signature Box located at the bottom of each page of the Bill of Quantities where the authorized representative of the Bidder shall affix his signature. Failure of the authorized representative to sign each and every page of the Bill of Quantities shall be a cause for rejection of his bid.

Republic of the Philippines
AGENCY : CIVIL AVIATION AUTHORITY OF THE PHILIPPINES
PROJECT : **REPAIR/REPLACEMENT OF APRON LIGHTING (LED TYPE) AT LAGUINDINGAN A/P**
LOCATION : **Laguindingan Aport, Laguindingan Misamis Oriental**
SUBJECT : **BILL OF QUANTITY/DETAILED ESTIMATE**

I. ELECTRICAL WORKS *Quantity = 1.00 lot*

A. DIRECT COST

1.10	PARTICULARS	QUANTITY		UNIT COST		AMOUNT
	APRON LIGHTING SYSTEM					
	1. **500-600Watts LED Apron Light**					
	- (to include wires and other accessories needed for the installation)					
	• with visor for less glare					
	• SMD3030 LED chips					
	• >150lm/W					
	- 2700K - 4000K Color Temperature					
	- >70Ra to >90Ra CRI					
	• 100Vac - 305Vac, 50/60Hz					
	• w/ LED Driver (XLG/ELG/HLG or OEM)					
	- 10kV SPD standard					
	- 90° beam angle					
	- 718mm x 422mm x 350mm product size					
	- 2 module with visor					
	• **MATERIAL**					
	• Die Cast Aluminum Body + High Light transmission					
	• Powder coating Finish	19.00	sets			
	• Swivel Bracket, Pole mounted bracket					
	• Asymmetric Wide light distribution					
	• Stainless Steel 304 Bolts and nuts					
	• modular for easy replacement					
	• **CERTIFICATIONS**					
	• ISO 9001:2015 Certification of the factory where the product is assembled or made					
	• IP66/IK08 (with IP66 and IK08 or higher Test Report of product offered)					
	• 3G Vibration Test Report					
	• CE Mark Certificate					
	• RoHS Certicate					
	• Static Pressure Test Report					
	• ***WARRANTY***					
	• 5 years					
	2. **500-600Watts LED Apron Light**					
	- (to include wires and other accessories needed for the installation)					
	• with visor for less glare					
	• SMD3030 LED chips					
	• >150lm/W					
	• 2700K - 4000K Color Temperature					
	• >70Ra to >90Ra CRI					
	• 100Vac - 305Vac, 50/60Hz					
	• w/ LED Driver (XLG/ELG/HLG or OEM)					
	• 10kV SPD standard					
	• 130°X37° beam angle					
	• 718mm x 422mm x 350mm product size					
	• 2 module with visor					
	• **MATERIAL**					
	• Die Cast Aluminum Body + High Light transmission					
	• Powder coating Finish	19.00	sets			
	• Swivel Bracket, Pole mounted bracket					
	• Asymmetric Wide light distribution					
	• Stainless Steel 304 Bolts and nuts					
	• modular for easy replacement					
	• **CERTIFICATIONS**					
	• ISO 9001:2015 Certification of the factory where the product is assembled or made					
	• IP66/IK08 (with IP66 and IK08 or higher Test Report of product offered)					
	• 3G Vibration Test Report					
	• CE Mark Certificate					
	• RoHS Certicate					
	• Static Pressure Test Report					
	• ***WARRANTY***					
	• 5 years					

Prepared by:
ROCKY S. BAHALA JR.
Electrical Engineer, ABMD

Page 1 of 2

TOTAL BID AMOUNT (*in WORDS*)

_____

Signature: _____

Printed Name: _____

Position: _____

Company Name: _____

Date: _____

3.	**8.0mm² THHN/TWN-2, Copper Wire, UL Listed**					
	Wire, Lead Free Type, 600v, 90°C Copper					
				MATERIAL COST		

1.20	EQUIPMENT	NO. OF UNITS	NO. OF HOURS	UNIT RATE	AMOUNT
				EQUIPMENT COST	

1.30	LABOR	NO. OF PERSON	NO. OF DAYS	UNIT RATE	AMOUNT
	1. Electrical Engineer				
	2. Foreman				
	3. Skilled Worker				
	4. Common Laborer				
				LABOR COST	

ESTIMATED DIRECT COST	
UNIT DIRECT COST	

B. INDIRECT COST

1.	OCM (Overhead, Contingencies, Miscellaneous)			
2.	Contractor's Profit			
3.	Value Added Tax, VAT (OCM + Contractor's Profit + Direct Cost)			

TOTAL INDIRECT COST	
TOTAL COST	3,289,453.13
UNIT COST	3,289,453.13 /lot

Prepared by:
ROCKY S. BARALA JR.
Electrical Engineer, ADMD

TOTAL BID AMOUNT (*in WORDS*)

_____

Signature: _____

Printed Name: _____

Position: _____

Company Name: _____

Date: _____

Republic of the Philippines
AGENCY : CIVIL AVIATION AUTHORITY OF THE PHILIPPINES
PROJECT : REPAIR/REPLACEMENT OF APRON LIGHTING (LED TYPE) AT LAGUINDINGAN A/P
LOCATION : Laguindingan Aiport, Lagwindingan Misamis Oriental
SUBJECT : BILL OF QUANTITY/DETAILED ESTIMATE

II. CIVIL WORKS *Quantity =* *1.00* *lot*

A. DIRECT COST

1.10	PARTICULARS	QUANTITY		UNIT COST		AMOUNT
1	**Stainless Steel Wire Rope**					
	• SS304					
	• 12mm					
2	**Enclosed Wooden box**	1.00	set			
	4ft x 6ft x 4ft dimension					
		MATERIAL COST				

1.20	EQUIPMENT	NO. OF UNITS		NO. OF HOURS		UNIT RATE		AMOUNT
1.	Hydraulic beam lifter truck							
2.	Boom truck crane							
				EQUIPMENT COST				

1.30	LABOR	NO. OF PERSON		NO. OF DAYS		UNIT RATE		AMOUNT
1.	Foreman							
2.	Skilled Worker							
3.	Common Laborer							
				LABOR COST				

ESTIMATED DIRECT COST	
UNIT DIRECT COST	

B. INDIRECT COST

1	OCM (Overhead, Contingencies, Miscellaneous)			
2.	Contractor's Profit			
3.	Value Added Tax, VAT (OCM + Contractor's Profit + Direct Cost)			

TOTAL INDIRECT COST	
TOTAL COST	**361,186.88**
UNIT COST	**361,186.88** /lot

Prepared by:
ROCKY S. BAHALA JR.
Electrical Engineer, ADMD

Page 1 of 1

TOTAL BID AMOUNT (*in WORDS*)

_____

Signature: _____

Printed Name: _____

Position: _____

Company Name: _____

Date: _____

Section IX. Checklist of Technical and Financial Documents

Notes on the Checklist of Technical and Financial Documents

The prescribed documents in the checklist are mandatory to be submitted in the Bid, but shall be subject to the following:

a. GPPB Resolution No. 09-2020 on the efficient procurement measures during a State of Calamity or other similar issuances that shall allow the use of alternate documents in lieu of the mandated requirements; or

b. any subsequent GPPB issuances adjusting the documentary requirements after the effectivity of the adoption of the PBDs.

The BAC shall be checking the submitted documents of each Bidder against this checklist to ascertain if they are all present, using a non-discretionary "pass/fail" criterion pursuant to Section 30 of the 2016 revised IRR of RA No. 9184.

Checklist of Technical and Financial Documents

I. TECHNICAL COMPONENT ENVELOPE

Class "A" Documents

Legal Documents

☐ (a) Valid PhilGEPS Registration Certificate (Platinum Membership) (all pages); in accordance with Section 8.5.2 of the IRR;

Technical Documents

☐ (b) Statement of the prospective bidder of all its ongoing government and private contracts, including contracts awarded but not yet started, if any, whether similar or not similar in nature and complexity to the contract to be bid; (Annex "A") **and**

☐ (c) Statement of the bidder's Single Largest Completed Contract (SLCC) similar to the contract to be bid, except under conditions provided under the rules; (Annex "B") **and**

☐ (d) Philippine Contractors Accreditation Board (PCAB) License; **or** Special PCAB License in case of Joint Venture and registration for the type and cost of the contract to be bid; **and** (Annex "C")

☐ (e) Original copy of Bid Security. If in the form of a Surety Bond, submit also a certification issued by the Insurance Commission; **or** original copy of Notarized Bid Securing Declaration; (Annex "D") **and**

(f) Project Requirements, which shall include the following:

☐ a. Organizational chart for the contract to be bid; (Annex "E")

☐ b. List of contractor's key personnel (*e.g.*, Project Manager, Project Engineers, Materials Engineers, and Foremen), to be assigned to the contract to be bid, with their complete qualification and experience data; (Annex "F") (Bio-data)
(Annex "Fa")

☐ c. List of contractor's major equipment units, which are owned, leased, and/or under purchase agreements, supported by proof of ownership or certification of availability of equipment from the equipment lessor/vendor for the duration of the project, as the case may be; (Annex "G") **and**

☐ (g) Original duly signed Omnibus Sworn Statement (OSS); (Annex "H") **and** if applicable, Original Notarized Secretary's Certificate in case of a corporation, partnership, or cooperative; or Original Special Power of Attorney of all members of the joint venture giving full power and authority to its officer to sign the OSS and do acts to represent the Bidder. (Annex "Ha")

☐ (h) Certificate of Site Inspection with Photocopy of Company ID (Annex "I")

☐ (i) Bid Bulletin (if applicable). (Annex "J")

Financial Documents

☐ (j) The prospective bidder's computation of Net Financial Contracting Capacity (NFCC).

Class "B" Documents

☐ (k) If applicable, duly signed joint venture agreement (JVA) in accordance with RA No. 4566 and its IRR in case the joint venture is already in existence;
or
duly notarized statements from all the potential joint venture partners stating that they will enter into and abide by the provisions of the JVA in the instance that the bid is successful.

II. FINANCIAL COMPONENT ENVELOPE

☐ (l) Original of duly signed and accomplished Financial Bid Form; (Annex "K") **and**

Other documentary requirements under RA No. 9184

☐ (m) Original of duly signed Bid Prices in the Bill of Quantities; (Annex "L") **and**

☐ Duly accomplished Detailed Estimates Form, including a summary sheet indicating the unit prices of construction materials, labor rates, and equipment rentals used in coming up with the Bid; (Annex "M", Ma, Mb, Mc) **and**

☐ (n) Cash Flow by Quarter. (Annex "N")

Section X. Bidding Forms

Statement of All On-going Contracts ----------Annex “A”
Statement of Single Largest Completed Contract ----------Annex “B”
Joint Resolution Form for Joint Venture (if applicable) ---------- Annex “C”
Bid-Securing Declaration ----------Annex “D”
Contractor’s Organizational Chart for the Project ---------- Annex “E”
Qualification of Key Personnel Proposed to be Assigned to the Project ----------Annex “F”
Key Personnel (Format Bio-Data) ----------Annex “Fa”
List of Equipment Owned or Leased and/or Under
purchased Agreements, Pledge to the Proposed project----------Annex “G”
Omnibus Sworn Statement ----------Annex “H”
Authority of Signatory (Secretary Certificate) ----------Annex “Ha”
Certificate of Site Inspection ----------Annex “I”
Bid Bulletin (if applicable) ----------Annex “J”
Bid Form ----------Annex “K”
Bid Prices in the Bill of Quantities ----------Annex “L”
Detailed Estimate ----------Annex “M”
Summary for Unit Prices of Materials ----------Annex “Ma”
Summary for Unit prices of Labor ----------Annex “Mb”
Summary of Unit Prices of Equipment ----------Annex “Mc”
Cash Flow by Quarter ----------Annex “N”

Annex "A"

{ATTACH COMPANY LETTERHEAD/LOGO}

Statement of all its ON-GOING government and private contracts, including contracts awarded but not yet started, if any, whether similar or not similar in nature and complexity to the contract to be bid

Name of Project: _____

Location of Project: _____

Name of Company : _____

Address of Company: _____

Name of Contract	a. Owner's Name b. Address c. Telephone No.	Nature of Work	Contractor's Role		Contract Amount at Award	a. Date Awarded b. Date of Contract c. Contract Duration d. Date Started e. Date Completed	Accomplishment		Values of Outstanding Works
			Description	%			Planned	Actual	
Government									
Private									
							Total value of outstanding works		

Submitted by: _____

(Print Name & Signature)

Designation: _____

Date: :_____

Annex "B"

{ATTACH COMPANY LETTERHEAD/LOGO}

Statement of single largest COMPLETED contract similar to the contract to be bid

Name of Project: _____
Location of Project: _____

Name of Company: _____
Address of Company: _____

Name of Contract	a. Owner's Name b. Address c. Telephone No.	Nature of Work	Contractor's Role		Contract Amount at Award	a. Date Awarded b. Date of Contract c. Contract Duration d. Date Started e. Date Completed
			Description	%		

Submitted by: _____

(Print Name & Signature)

Designation: _____

Date: :_____

Annex "C"

JOINT RESOLUTION

Whereas, _____ (Bidder / Name of Particular JV Partner), duly organized and existing under the Laws of the _____, with office address at _____, represented herein by its _____, _____, and _____ (Name of Particular JV Partner), duly organized and existing under the Laws of the _____, with main office address at _____, represented by herein by its _____, have entered into a Joint Venture (JV) Agreement to undertake the following project / contract:

(Name of Project / Contract)

Whereas, in order to facilitate the orderly execution and conduct of the contract that was entered into by the joint venture in the name of the joint venture, it is hereby resolved by the parties in the Joint Venture as follows:

a. To appoint _____ as the Authorized Managing Officer and Official Representative, to represent, to manage the Joint Venture and is empowered to enter in contract in the name of the Joint Venture, or to sign for any document in the name of the Joint Venture required by the (Procurement Agency) or any entities pursuant to the terms of the Joint Venture Agreement:

b. That, the parties agreed to make _____(Name of Particular Lead Partner) _____ as the Lead Partner of the Joint Venture and (Name of Authorized Officer)_____ as the Official Representative & Managing Partner of the Joint Venture, and are granted full power and authority to do, execute and perform any and all acts necessary and/or to represent the Joint Venture in the Eligibility Check, Bidding and Undertaking of the said contract in the name of the Joint Venture, as fully and effectively and the Joint Venture may do and if personally present with full power of substitution and revocation. _____ is fully

authorized and empowered to sign any or all documents pertaining to the above stated project / contract in the name of the Joint Venture.

c. That the parties agree to be jointly and severally liable for their participation in the Eligibility Check, Bidding and Undertaking of the said contract.

. That the terms of the JV Agreement entered into the parties shall be valid and is co-terminus with the final completion and turnover of the Name of Contract / Project to the agency of the government, which in this case, the (Name of Procurement Entity);

IN WITNESS THEREFORE, We hereby sign jointly this Joint Resolution this _____ day of _____, 20 ____ in _____.

Name of Bidder (Lead Partner)

By: _____

Signature & Name of Managing Officer

_____

Designation / Position

Name of Bidder (Member Partner)

By: _____

Signature & Name of Authorized Authorized Representative

_____

Designation / Position

Name of Bidder (Member Partner)

By: _____

Signature & Name of Managing Officer

_____

Designation / Position

Name of Bidder (Member Partner)

By: _____

Signature & Name of Authorized

_____

Designation / Position

SIGNED IN THE PRESENCE OF:

_____

_____

_____

ACKNOWLEDGEMENT

REPUBLIC OF THE PHILIPPINES
CITY OF (_____)S.S

BEFORE ME, a Notary Public, for and in the City of _____, Philippines, this _____ day of _____, 20____ personally appeared the following persons:

NAME	**Community Cert. No.**	**Date / Place of Issue**

Representing to be the _____ of _____ and _____ of _____ respectively, known to me and to me known to be the same persons who executed the foregoing instrument for and in behalf of said corporations and who acknowledge to me that same is their free and voluntary act and deed as well as of the corporations which they represent, for the uses, purposes, and considerations therein set forth and that they are duly authorized to sign the same.

This Instrument consists of THREE (3) pages including this page wherein this Acknowledgement is written and signed by the parties and their instrumental witnesses on each and every page thereon.

WITNESS MY HAND AND NOTARIAL SEAL at the place and date hereinafter first above written.

NOTARY PUBLIC

Doc. No. _____

Book No. _____

Page No. _____

Series of _____

Annex "D"
Bid Securing Declaration Form

[shall be submitted with the Bid if bidder opts to provide this form of bid security]

REPUBLIC OF THE PHILIPPINES
CITY OF _____)S.S

Bid-Securing Declaration
Project Identification No.:[Insert Number]

To: *[Insert name and address of the Procuring Entity]*

I/We, the undersigned, declare that:

1. I/We understand that, according to your conditions, bids must be supported by a Bid Security, which may be in the form of a Bid-Securing Declaration.

2. I/We accept that: (a) I/we will be automatically disqualified from bidding for any procurement contract with any procuring entity for a period of two (2) years upon receipt of your Blacklisting Order; and, (b) I/we will pay the applicable fine provided under Section 6 of the Guidelines on the Use of Bid Securing Declaration, within fifteen (15) days from receipt of written demand by the procuring entity for the commission of acts resulting to the enforcement of the bid securing declaration under Sections 23.1(b), 34.2, 40.1 and 69.1, except 69.1 (f), of the IRR of RA 9184; without prejudice to other legal action the government may undertake.

3. I/We understand that this Bid-Securing Declaration shall cease to be valid on the following circumstances:

   a. Upon expiration of the bid validity period, or any extension thereof pursuant to your request;

   b. I am/we are declared ineligible or post-disqualified upon receipt of your notice to such effect, and (i) I/we failed to timely file a request for reconsideration or (ii) I/we filed a waiver to avail of said right; and

   c. I am/we are declared as the bidder with the Lowest Calculated Responsive Bid, and I/we have furnished the performance security and signed the Contract.

IN WITNESS WHEREOF, I/We have hereunto set my/our hand/s this ____ day of *[month] [year]* at *[place of execution]*.

[Insert NAME OF BIDDER'S AUTHORIZED REPRESENTATIVE]
[Insert signatory's legal capacity]
Affiant

[Jurat]

[Format shall be based on the latest Rules on notarial practice]

Annex "E"

Contractor's Organizational Chart for the Project

Submit Copy of the Organizational Chart that the Contractor intends to use to execute the contract if awarded to him. Indicate in the chart the names of the Key Engineering Personnel who will be assigned in the Project.

{ATTACH COMPANY LETTERHEAD/LOGO}

Attach the required Proposed Organizational Chart for the Contract as stated above.

Submitted by: _____

Designation : _____

Date : _____

Annex "F"

{ATTACH COMPANY LETTERHEAD/LOGO}

Qualification of Key Personnel Proposed to be Assigned to the Project

Name of Project: _____
Location of Project: _____

Name of Company: _____
Address of Company: _____

	Project Manager/Engineer	Material Engineer	Foreman	Construction Safety and Health Personnel	Other Position deemed required by the Applicant for this project
1. Name					
2. Address					
3. Date of Birth					
4. Employed Since					
5. Experience					
6. Previous Employment					
7. Education					
8. PRC License					

Note: Attached individual PRC License of the (professional) personnel.

Submitted by _____
(Signature over Printed Name)
Designation _____
Date _____

Annex "Fa"

KEY PERSONNEL

(FORMAT OF BIO-DATA)

Give the detailed information of the following personnel who are scheduled to be assigned as full-time field staff for the project. Fill up a form for each person.

1. Authorized Managing Officer / Representative: _____

2. Sustained Technical Employee:

Name: _____

Date of Birth: _____

Nationality: _____

Education and Degrees: _____

Specialty: _____

Registration: _____

Length of Service with the Firm:

_____Year From _____ (months) _____ (year)

To _____ (months) _____ (year)

Years of Experience:

If Item 7 is less than ten (10) years, give name and length of service with previous employers for more than (attached additional sheet/s, if necessary)

Name and Address of Employer Length of Service

_____ _____ year(s) from _____to _____

_____ _____ year(s) from _____to _____

_____ _____ year(s) from _____to _____

Experience:

This should cover the past five (5) years of experience. (Attached as many pages as necessary to show involvement of personnel in projects using the format below).

a. Name: _____
b. Name and Address of Owner: _____
_____
c. Name and Address of the Owner's Engineer (Consultant):_____
_____
d. Indicate the Features of Project (particulars of the project components and any other particular interest connected with the project): _____
_____
e. Contract Amount Expressed in Philippine Currency: _____
f. Position: _____
g. Structures for which the employee was responsible: _____
_____
h. Assignment Period: from _____(months) _____(years)
to _____(months) _____(years)

_____

Name and Signature of Employee

It is hereby certified that the above personnel can be assigned to the _____ Project, if the contract is awarded to our company.

_____ _____

(Place and Date) (The Authorized Representative)

Annex "G"

List of Equipment, Owned or Leased and/or under Purchased Agreements, Pledge to the Proposed Project

Name of Project: _____

Location of Project: _____

Name of Company: _____

Address of Company: _____

Description	Model/Year	Capacity/ Performance/ Size	Plate No.	Motor No./ Body No.	Location	Condition	Proof of Ownership/ Lessor or Vendor
A. Owned							
I.							
II.							
III.							
IV.							
V.							
B. Leased							
I.							
II.							
III.							
IV.							
V.							
C. Under Purchased Agreement							
I.							
II.							
III.							
IV.							
V.							

Submitted by _____

(Signature over Printed Name)

Designation _____

Date _____

Annex "H"

Omnibus Sworn Statement (Revised)

REPUBLIC OF THE PHILIPPINES)
(CITY/MUNICIPALITY OF _____) S.S.

AFFIDAVIT

I, *[Name of Affiant]*, of legal age, *[Civil Status]*, *[Nationality]*, and residing at *[Address of Affiant]*, after having been duly sworn in accordance with law, do hereby depose and state that:

1. ***Select one, delete the other:***

   If a sole proprietorship: I am the sole proprietor or authorized representative of *[Name of Bidder]* with office address at *[address of Bidder]*;

   If a partnership, corporation, cooperative, or joint venture: I am the duly authorized and designated representative of *[Name of Bidder]* with office address at *[address of Bidder]*;

2. ***Select one, delete the other:***

   If a sole proprietorship: As the owner and sole proprietor or authorized representative of *[Name of Bidder]*, I have full power and authority to do, execute and perform any and all acts necessary to participate, submit the bid, and to sign and execute the ensuing contract for *[Name of the Project]* of the *[Name of the Procuring Entity]* as shown in attached duly notarized Special Power of Attorney;

   If a partnership, corporation, cooperative, or joint venture: I am granted full power and authority to do, execute and perform any and all acts necessary to participate, submit the bid, and to sign and execute the ensuing contract for *[Name of the Project]* of the *[Name of the Procuring Entity]*, as shown in the attached [*state title of attached document showing proof of authorization (e.g., duly notarized Secretary's Certificate, Board/Partnership resolution, or Special Power of Attorney, whichever is applicable)];*

3. *[Name of Bidder]* is not "blacklisted" or barred from bidding by the Government of the Philippines or any of its agencies, offices, corporations, or Local Government Units, foreign government/foreign or international financing institution whose blacklisting rules have been recognized by the Government Procurement Policy Board; **by itself or by relation, membership, association, affiliation, or controlling interest with another blacklisted person or entity as defined and provided for in the Uniform Guidelines on Blacklisting;**

4. Each of the documents submitted in satisfaction of the bidding requirements is an authentic copy of the original, complete, and all statements and information provided therein are true and correct;

5. *[Name of Bidder]* is authorizing the Head of the Procuring Entity or its duly authorized representative(s) to verify all the documents submitted;

6. ***Select one, delete the rest:***

   If a sole proprietorship: The owner or sole proprietor is not related to the Head of the Procuring Entity, members of the Bids and Awards Committee (BAC), the Technical Working Group, and the BAC Secretariat, the head of the Project Management Office or the end-user unit, and the project consultants by consanguinity or affinity up to the third civil degree;

   If a partnership or cooperative: None of the officers and members of *[Name of Bidder]* is related to the Head of the Procuring Entity, members of the Bids and Awards Committee (BAC), the Technical Working Group, and the BAC Secretariat, the head of the Project Management Office or the end-user unit, and the project consultants by consanguinity or affinity up to the third civil degree;

   If a corporation or joint venture: None of the officers, directors, and controlling stockholders of *[Name of Bidder]* is related to the Head of the Procuring Entity, members of the Bids and Awards Committee (BAC), the Technical Working Group, and the BAC Secretariat, the head of the Project Management Office or the end-user unit, and the project consultants by consanguinity or affinity up to the third civil degree;

7. *[Name of Bidder]* complies with existing labor laws and standards; and

8. *[Name of Bidder]* is aware of and has undertaken the following responsibilities as a Bidder in compliance with the Philippine Documents, which includes:

   a) Carefully examine all of the Bidding Documents;

   b) Acknowledge all conditions, local or otherwise, affecting the implementation of the Contract;

   c) Making an estimate of the facilities available and needed for the contract to be bid, if any; and

   d) Inquire or securing Supplemental/Bid Bulletin(s) issued for the *[Name of the Project]*.

9. *[Name of Bidder]* did not give or pay directly or indirectly, any commission, amount, fee, or any form of consideration, pecuniary or otherwise, to any person or official, personnel or representative of the government in relation to any procurement project or activity.

10. **In case advance payment was made or given, failure to perform or deliver any of the obligations and undertakings in the contract shall be sufficient grounds to constitute criminal liability for Swindling (Estafa) or the commission of fraud with unfaithfulness or abuse of confidence through misappropriating or converting any**

payment received by a person or entity under an obligation involving the duty to deliver certain goods or services, to the prejudice of the public and the government of the Philippines pursuant to Article No. 3815 s.1930, as amended, or the Revised Penal Code.

IN WITNESS WHEREOF, I have hereunto set my hand this ___ day of ____ 20___ at _____, Philippines.

[Insert NAME OF BIDDER OR ITS AUTHORIZED REPRESENTATIVE]
[Insert signatory's legal capacity]
Affiant

[Jurat]
[Format shall be based on the latest Rules on Notarial Practice]

Annex "Ha"

AUTHORITY OF SIGNATORY
(SECRETARY'S CERTIFICATE)

I, a duly elected and qualified Corporate Secretary of (Name of the Bidder), a corporation duly organized and existing under and by virtue of the law of the, DO HEREBY CERTIFY, that:

I am familiar with the facts herein certified and duly authorized to certify the same; At the regular meeting of the Board of Directors of the said Corporation duly convened and held on at which meeting a quorum was present and acting throughout, the following resolutions were approved, and the same have been annulled, revoked and amended in any way whatever and are in full force and effect on the date hereof:

RESOLVED, that*(Name of Bidder)*be, as it hereby is, authorized to participate in the bidding of*(Name of the Project)*by the*(Name of the Procuring Entity)*; and if awarded the project shall enter into a contract with the*(Name of the Procuring Entity)*and in connection therewith hereby appoints*(Name of Representative)*, acting as duly authorized and designated representatives of*(Name of the Bidder)*, and granted full power and authority to do, execute and perform any and all acts necessary and/or to represent*(Name of the Bidder)*in the bidding as fully and effectively as the*(Name of the Bidder)*might do if personally present with full power of substitution and revocation and hereby satisfying and confirming all that my said representative shall lawfully do or cause to be done by virtue hereof;

RESOLVED FERTHER THAT, the Board hereby authorized its President to:

a. execute a waiver of jurisdiction whereby the *(Name of the Bidder)*hereby submits itself to the jurisdiction of the Philippine government and hereby waives its right to question the jurisdiction of the Philippine court;
b. execute a waiver that the *(Name of the Bidder)* shall not seek and obtain writ of injunctions or prohibition or restraining order against the CAAP or any other agency in connection with this Project to prevent and restrain the bidding procedures related thereto, the negotiating and award of a contract to a successful bidder, and the carrying out of the awarded project.

WITNESS the signature of the undersigned as such officer of the said_this.

(Corporate Secretary)

SUBSCRIBED AND SWORN to before me this day of, 2023 affiant exhibited to me his/her Community Tax Certificate No. _____ issued on_____at, Philippines.

Notary Public

Until 31 December 20_____

PRT No.: _____

Issued at: _____

Issued on: _____
TIN No.: _____

Doc. No. _____

Page No.: _____

Book No.: _____

Series of _____

Annex "I"

Republic of the Philippines
CIVIL AVIATION AUTHORITY OF THE PHILIPPINES

CERTIFICATE OF SITE INSPECTION

This is to certify that _____employee of _____ has conducted the site inspection for the bidding of the project "_____" at _____.

Issued this _____ 2023.

Airport Manager/Officer-in-Charge:

_____
Signature over Printed Name

Annex "J"

BID BULLETIN (if applicable)

Annex "K"

Bid Form for the Procurement of Infrastructure Projects

[shall be submitted with the Bid]

BID FORM

Date:_____

Project Identification No.:_____

To: *[name and address of PROCURING ENTITY]*

Having examined the Philippine Bidding Documents (PBDs) including the Supplemental or Bid Bulletin Numbers *[insert number]*, the receipt of which is hereby duly acknowledged, we, the undersigned, declare that:

a. We have no reservation to the PBDs, including the Supplemental or Bid Bulletins, for the Procurement Project: [insert name of contract];

b. We offer to execute the Works for this Contract in accordance with the PBDs;

c. The total price of our Bid in **words** and **figures,** excluding any discounts offered below is: [insert information];

d. The discounts offered and the methodology for their application are: [insert information];

e. The total bid price includes the cost of all taxes, such as, but not limited to: [specify the applicable taxes, e.g. (i) value added tax (VAT), (ii) income tax, (iii) local taxes, and (iv) other fiscal levies and duties], which are itemized herein and reflected in the detailed estimates,

f. Our Bid shall be valid within a period stated in the PBDs, and it shall remain binding upon us at any time before the expiration of that period;

g. If our Bid is accepted, we commit to obtain a Performance Security in the amount of [insert percentage amount] percent of the Contract Price for the due performance of the Contract, or a Performance Securing Declaration in lieu of the the allowable forms of Performance Security, subject to the terms and conditions of issued GPPB guidelines for this purpose;

h. We are not participating, as Bidders, in more than one Bid in this bidding process, other than alternative offers in accordance with the Bidding Documents;

i. We understand that this Bid, together with your written acceptance thereof included in your notification of award, shall constitute a binding contract between us, until a formal Contract is prepared and executed; and

j. We understand that you are not bound to accept the Lowest Calculated Bid or any other Bid that you may receive.

k. We likewise certify/confirm that the undersigned, is the duly authorized representative of the bidder, and granted full power and authority to do, execute and perform any and all acts necessary to participate, submit the bid, and to sign and execute the ensuing contract for the [Name of Project] of the [Name of the Procuring Entity].

l. We acknowledge that failure to sign each and every page of this Bid Form, including the Bill of Quantities, shall be a ground for the rejection of our bid.

Name: _____

Legal Capacity: _____

Signature: _____

Duly authorized to sign the Bid for and behalf of: _____

Date: _____

Annex "L"

(BID PRICES IN THE BILL OF QUANTITIES)

{Attach Company Letterhead/Logo}

Project : **REPAIR/REPLACEMENT OF APRON LIGHTING (LED Type) at LAGUINDINGAN A/P (1st Rebid)**

Location :**Laguindingan Airport, Laguindingan, Misamis Oriental**

ITEM NO.	DESCRIPTION	QTY	UNIT	UNIT PRICE	AMOUNT
I.					
II.					
III.					
IV.					

TOTAL BID AMOUNT *(in FIGURES)* PHP _____

TOTAL BID AMOUNT (*in WORDS*)

_____

_____

_____

Signature: _____

Printed Name: _____

Position: _____

Name of Company: _____

Date: _____

Annex "M"

DETAILED ESTIMATES

Republic of the Philippines

AGENCY: CIVIL AVIATION AUTHORITY OF THE PHILIPPINES
PROJECT: REPAIR/REPLACEMENT OF APRON LIGHTING (LED TYPE) AT LAGUINDINGAN A/P
LOCATION: Laguindingan Apron, Laguindingan Misamis Oriental
SUBJECT: BILL OF QUANTITY/DETAILED ESTIMATE

I. ELECTRICAL WORKS — *Quantity =* 1.00 lot

A. DIRECT COST

1.10	PARTICULARS	QUANTITY		UNIT COST		AMOUNT
	APRON LIGHTING SYSTEM					
1	**500-600Watts LED Apron Light**					
	- (to include wires and other accessories needed for the installation)					
	- with visor for less glare					
	- SMD3030 LED chips					
	- >160lm/W					
	- 2700K - 4000K Color Temperature					
	- >70Ra to >90Ra CRI					
	- 100Vac - 305Vac, 50/60Hz					
	- w/ LED Driver (XLG/ELG/HLG or OEM)					
	- 10kV SPD standard					
	- 60° beam angle					
	- 718mm x 422mm x 350mm product size					
	- 2 module with visor					
	- **MATERIAL**					
	- Die Cast Aluminum Body + High Light transmission					
	- Powder coating Finish	19.00	sets			
	- Swivel Bracket, Pole mounted bracket					
	- Asymmetric Wide light distribution					
	- Stainless Steel 304 Bolts and nuts					
	- modular for easy replacement					
	- **CERTIFICATIONS**					
	- ISO 9001:2015 Certification of the factory where the product is assembled or made					
	- IP66/IK08 (with IP66 and IK08 or higher Test Report of product offered)					
	- 3G Vibration Test Report					
	- CE Mark Certificate					
	- RoHS Certicate					
	- Static Pressure Test Report					
	- ***WARRANTY***					
	- 5 years					
2.	**500-600Watts LED Apron Light**					
	- (to include wires and other accessories needed for the installation)					
	- with visor for less glare					
	- SMD3030 LED chips					
	- >150lm/W					
	- 2700K - 4000K Color Temperature					
	- >70Ra to >90Ra CRI					
	- 100Vac - 305Vac, 50/60Hz					
	- w/ LED Driver (XLG/ELG/HLG or OEM)					
	- 10kV SPD standard					
	- 130°x37° beam angle					
	- 718mm x 422mm x 350mm product size					
	- 2 module with visor					
	- **MATERIAL**					
	- Die Cast Aluminum Body + High Light transmission					
	- Powder coating Finish	19.00	sets			
	- Swivel Bracket, Pole mounted bracket					
	- Asymmetric Wide light distribution					
	- Stainless Steel 304 Bolts and nuts					
	- modular for easy replacement					
	- **CERTIFICATIONS**					
	- ISO 9001:2015 Certification of the factory where the product is assembled or made					
	- IP66/IK08 (with IP66 and IK08 or higher Test Report of product offered)					
	- 3G Vibration Test Report					
	- CE Mark Certificate					
	- RoHS Certicate					
	- Static Pressure Test Report					
	- ***WARRANTY***					
	- 5 years					

Prepared by:
ROCKY S. BAHALA JR.
Electrical Engineer, ATMD

Page 1 of 2

TOTAL BID AMOUNT *(in FIGURES)* PHP _____

TOTAL BID AMOUNT (*in WORDS*)

_____

_____

_____

Signature: _____

Printed Name: _____

Position: _____

Name of Company: _____

Date: _____

	3.	8.0mm² THHN/TWN-2, Copper Wire, UL Listed				
		Wire, Lead Free Type, 600v, 90°C Copper				
				MATERIAL COST		

1.20	EQUIPMENT	NO. OF UNITS	NO. OF HOURS	UNIT RATE	AMOUNT
			EQUIPMENT COST		

1.30	LABOR	NO. OF PERSON	NO. OF DAYS	UNIT RATE	AMOUNT
	1. Electrical Engineer				
	2. Foreman				
	3. Skilled Worker				
	4. Common Laborer				
			LABOR COST		

ESTIMATED DIRECT COST	
UNIT DIRECT COST	

B. INDIRECT COST

1.	OCM (Overhead, Contingencies, Miscellaneous)			
2.	Contractor's Profit			
3.	Value Added Tax, VAT (OCM + Contractor's Profit + Direct Cost)			

TOTAL INDIRECT COST		
TOTAL COST	3,289,453.13	
UNIT COST	3,289,453.13	/lot

Prepared by:
ROCKY S. BALALA JR.
Electrical Engineer, ADMD

Page 2 of 2

TOTAL BID AMOUNT *(in FIGURES)* PHP _____

TOTAL BID AMOUNT (*in WORDS*)

_____

_____

_____

Signature: _____

Printed Name: _____

Position: _____

Name of Company: _____

Date: _____

Republic of the Philippines

AGENCY	CIVIL AVIATION AUTHORITY OF THE PHILIPPINES
PROJECT	REPAIR/REPLACEMENT OF APRON LIGHTING (LED TYPE) AT LAGUINDINGAN A/P
LOCATION	Laguindingan Aiport, Laguindingan Misamis Oriental
SUBJECT	BILL OF QUANTITY/DETAILED ESTIMATE

II. CIVIL WORKS *Quantity =* *1.00* *lot*

A. DIRECT COST

1.10	PARTICULARS	QUANTITY		UNIT COST		AMOUNT
1.	**Stainless Steel Wire Rope**					
	• SS304					
	• 12mm					
2.	**Enclosed Wooden box**	1.00	set			
	4ft x 6ft x 4ft dimension					
		MATERIAL COST				

1.20	EQUIPMENT	NO. OF UNITS		NO. OF HOURS		UNIT RATE		AMOUNT
1.	Hydraulic beam lifter truck							
2.	Boom truck crane							
				EQUIPMENT COST				

1.30	LABOR	NO. OF PERSON		NO. OF DAYS		UNIT RATE		AMOUNT
1.	Foreman							
2.	Skilled Worker							
3.	Common Laborer							
				LABOR COST				

ESTIMATED DIRECT COST	
UNIT DIRECT COST	

B. INDIRECT COST

1	OCM (Overhead, Contingencies, Miscellaneous)			
2	Contractor's Profit			
3.	Value Added Tax, VAT (OCM + Contractor's Profit + Direct Cost)			

TOTAL INDIRECT COST	
TOTAL COST	**361,186.88**
UNIT COST	**361,186.88** /lot

Prepared by:
BOCKY S. BAHALA JR.
Electrical Engineer, ADMD

Page 1 of 1

TOTAL BID AMOUNT *(in FIGURES)* PHP _____

TOTAL BID AMOUNT (*in WORDS*)

_____

_____

_____

Signature: _____

Printed Name: _____

Position: _____

Name of Company: _____

Date: _____

Annex "Ma"

{ATTACH COMPANY LETTERHEAD/LOGO}

SUMMARY FOR UNIT PRICES OF MATERIALS

PROJECT: **REPAIR/REPLACEMENT OF APRON LIGHTING (LED Type) at LAGUINDINGAN A/P (1st Rebid)**

LOCATION: **Laguindingan Airport, Laguindingan Misamis Oriental**

DESCRIPTION	UNIT PRICE	UNIT

SUBMITTED BY:

Signature: _____
Printed Name: _____
Position: _____
Name of Company: _____
Date: _____

Annex "Mb"

{ATTACH COMPANY LETTERHEAD/LOGO}

SUMMARY FOR UNIT PRICES OF LABOR

PROJECT: **REPAIR/REPLACEMENT OF APRON LIGHTING (LED Type) at LAGUINDINGAN A/P (1st Rebid)**

LOCATION: **Laguindingan Airport, Laguindingan Misamis Oriental**

DESCRIPTION	UNIT PRICE	UNIT

SUBMITTED BY:

Signature: _____

Printed Name: _____

Position: _____

Name of Company: _____

Date: _____

Annex "Mc"

{ATTACH COMPANY LETTERHEAD/LOGO}

SUMMARY FOR UNIT PRICES OF EQUIPMENT

PROJECT: **REPAIR/REPLACEMENT OF APRON LIGHTING (LED Type) at LAGUINDINGAN A/P (1st Rebid)**

LOCATION: **Laguindingan Airport, Laguindingan Misamis Oriental**

DESCRIPTION	UNIT PRICE	UNIT

SUBMITTED BY:

Signature: _____

Printed Name: _____

Position: _____

Name of Company: _____

Date: _____

Annex "N"

{ATTACH COMPANY LETTERHEAD/LOGO}

Name of Project : _____
Location of the Project: _____

CASH FLOW BY QUARTER AND PAYMENT SCHEDULE

Submitted by:

PARTICULAR	% W	1ST QUARTER	2ND QUARTER	3RD QUARTER	4TH QUARTER
ACCOMPLISHMENT					
CASH FLOW					
CUMULATIVE ACCOMPLISHMENT					
CUMULATIVE CASH FLOW					

Name of the Representative of the Bidder

_____

Position

_____

Name of the Company

_____

Date

_____